PROJECT 22: Design and Analysis of 4:1 MUX using 2:1 MUX by using Cadence Virtuoso

A Comprehensive Study of Analog Circuits

By: Priya Chaudhary, Astitva Johri and
Bhavya Solanki

Chapters:

List of Figures……..…… 3

1. Introduction …….. 4
2. Brief Description…… 5
3. Circuit Design……. 6-7
   3.1 Schematic Design……... 6
   3.2 Simulation Setup...…….. 6
   3.3 Transient Analysis…….. 6
4. Simulation Results…….. 8
5. Advantages and Disadvantages…….. 9
   5.1 Advantages……. 9
   5.2 Disadvantages……. 9
6. Conclusion…….. 10
7. Frequently Asked Questions (FAQs)…….. 11

LIST OF FIGURES

Figure 3.1 Symbol of 4:1 MUX……... 7

Figure 3.2 Circuit of 4:1 by using 2:1 MUX……..…... 7

Figure 4.1 Simulation Results of 4:1 MUX……... 8

1. INTRODUCTION

Multiplexers (MUXes) are fundamental components in digital circuit design, widely used in data routing, signal selection, and various computational applications. A 4:1 MUX allows four input signals to be transmitted through a single output line based on two selection signals, reducing the number of required interconnects and improving circuit efficiency. Rather than designing a 4:1 MUX directly, using 2:1 MUXes offers a modular and scalable approach that simplifies implementation and verification.

This document provides an in-depth analysis of the design and implementation of a 4:1 multiplexer using 2:1 MUXes within the Cadence Virtuoso design environment. The approach allows for an optimized and reusable circuit structure, making it a preferred methodology in digital logic design. Additionally, we explore the advantages and disadvantages of this approach, practical implementation steps, and common challenges encountered during the design and verification process.

Truth Table of 4:1 MUX:

S1	S0	Output (Y)
0	0	D0
0	1	D1
1	0	D2
1	1	D3

2. BRIEF DESCRIPTION

A multiplexer is a fundamental combinational circuit in digital electronics that functions as a data selector. It allows multiple input signals to be directed to a single output line based on the combination of select signals. This characteristic makes multiplexers essential in applications such as data transmission, bus systems, and logic circuit optimization.

The 4:1 multiplexer consists of four input signals and two select signals, which determine which input is propagated to the output. The multiplexer operates by using logic gates to enable or disable specific inputs based on the select lines' values. Instead of designing a 4:1 MUX from scratch, it can be built using smaller 2:1 MUXes. This modular approach reduces design complexity, facilitates debugging, and makes the circuit more scalable for larger applications.

The construction of a 4:1 MUX using 2:1 MUXes follows a hierarchical methodology. Initially, two 2:1 MUXes are used to choose between pairs of inputs, controlled by the first select signal. The outputs of these two MUXes are then fed into a third 2:1 MUX, which selects the final output based on the second select signal. This design effectively implements the multiplexer logic in a structured and reusable way.

Using Cadence Virtuoso, the design process starts with schematic entry, where individual 2:1 MUX circuits are built using CMOS transmission gates or logic gates. These components are then connected to form the complete 4:1 MUX circuit.

3. CIRCUIT DESIGN

3.1 Schematic Design

1. Create the 2:1 MUX unit using basic CMOS logic.
2. Instantiate three 2:1 MUXes and connect them hierarchically to form the 4:1 MUX.
3. Define input and output terminals and label them appropriately.
4. Perform electrical rule checks (ERC) and design rule checks (DRC) to ensure correctness.

3.2 Simulation Setup

1. Apply different combinations of select signals and inputs.
2. Observe the output to ensure that the correct input is passed through.
3. Check for propagation delays, power dissipation, and any unwanted glitches.
4. Optimize transistor sizing if necessary to improve performance.

3.3 Transient Analysis

- Set up a transient simulation with varying input transitions.
- Observe the timing of output signal transitions.
- Measure rise and fall times, ensuring they are within acceptable limits.
- Analyze waveform distortions and optimize layout to reduce parasitic effects.

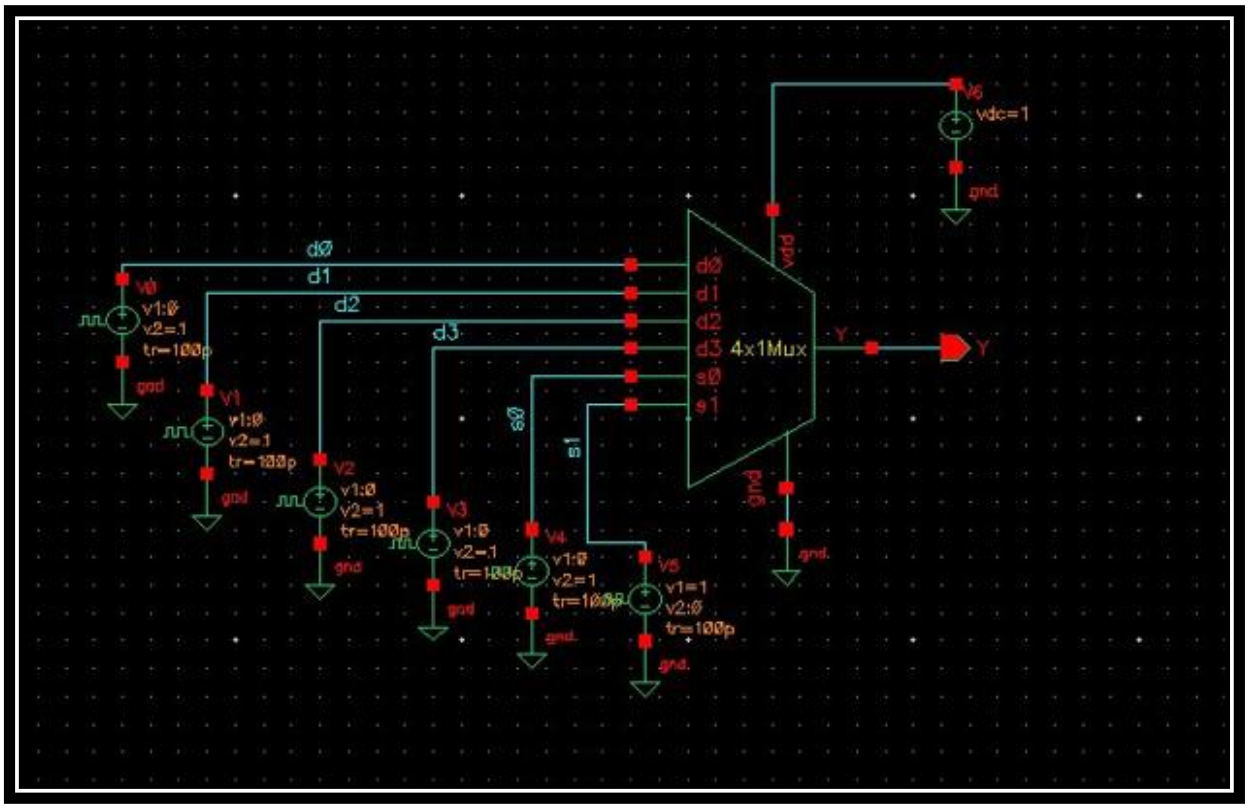

Figure 3.1 Symbol of 4:1 MUX

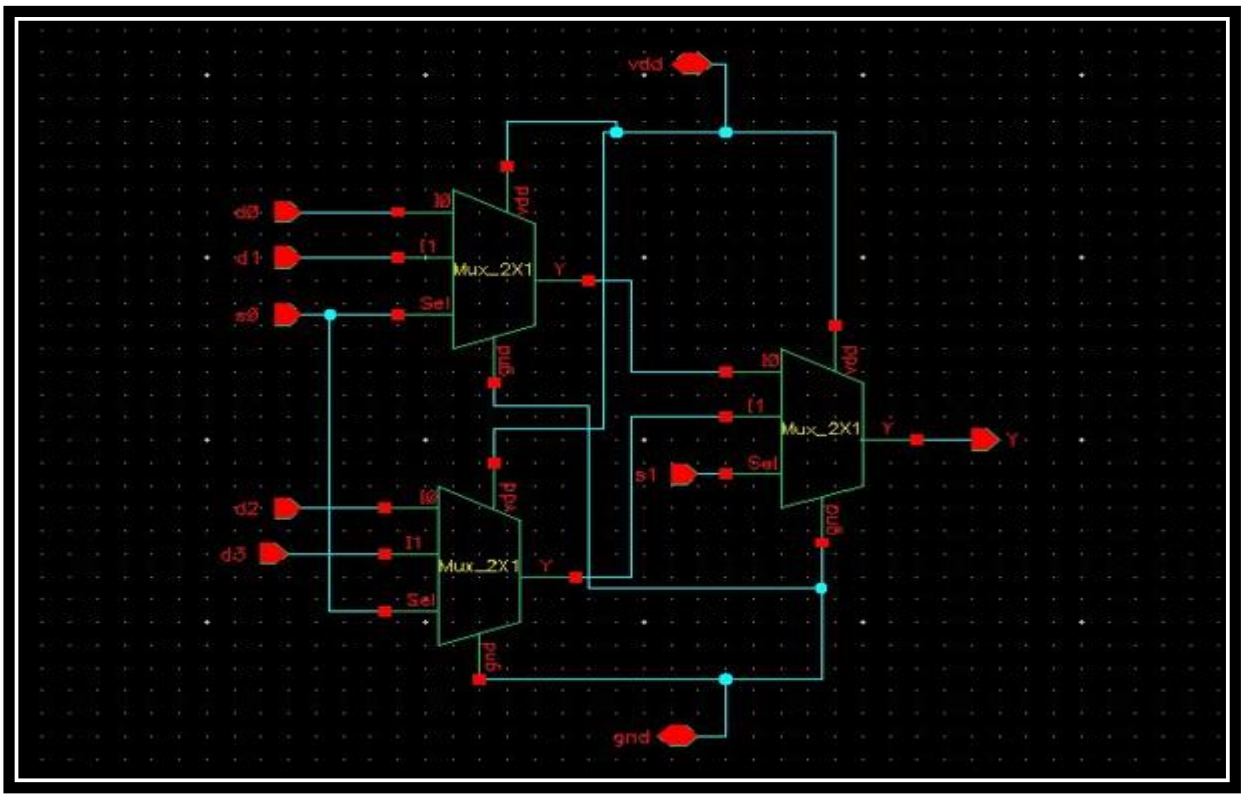

Figure 3.2 Circuit of 4:1 MUX by using 2:1 MUX

4. SIMULATION RESULTS

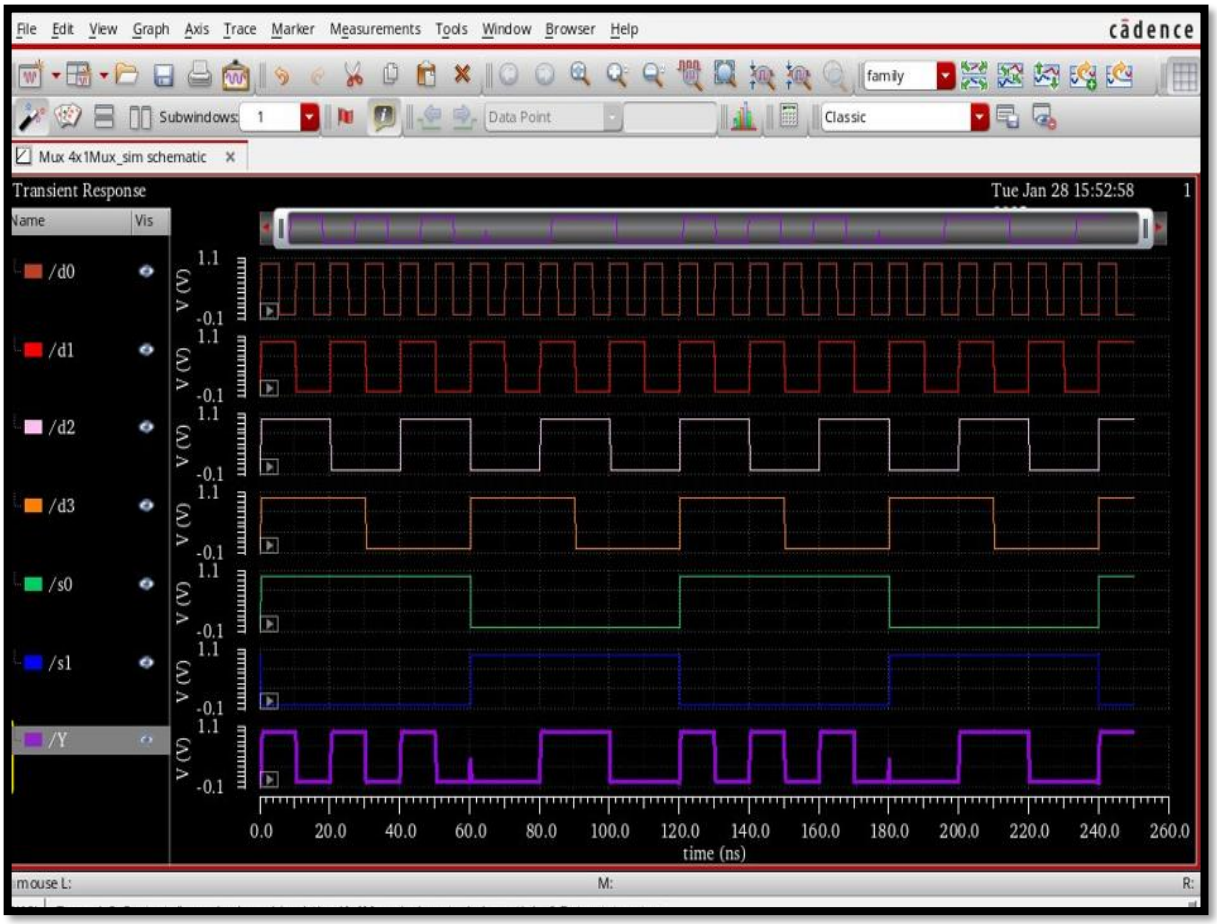

Figure 4.1: Simulation Results of 4:1 MUX

5. ADVANTAGES AND DISADVANTAGES

5.1 Advantages:-

1. **Modularity:** Using 2:1 MUXes enables modular circuit design, making debugging and scaling easier.
2. **Reduced Design Complexity:** Simplifies the design process by reusing a smaller building block.
3. **Improved Performance:** The design can be optimized for power and delay using efficient 2:1 MUX implementations.
4. **Scalability:** The concept can be extended to larger multiplexers (e.g., 8:1, 16:1) using the same approach.

5.2 Disadvantages:-

1. **Increased Propagation Delay:** The multi-stage approach increases the total delay compared to a direct 4:1 MUX implementation.
2. **Higher Power Consumption:** Additional MUX stages may introduce extra power dissipation.
3. **Increased Area:** More transistors and interconnections lead to larger chip area.

6. CONCLUSION

Designing and analyzing a 4:1 multiplexer using 2:1 MUXes in Cadence Virtuoso provides significant insights into hierarchical circuit design, modularization, and practical hardware implementation. By leveraging smaller, well-tested components like the 2:1 multiplexer, designers can simplify the overall design process, enhance reliability, and facilitate easier debugging and expansion for larger multiplexer circuits.

While the approach has clear advantages in terms of modularity and ease of design, it also presents trade-offs in propagation delay, power consumption, and layout area. However, with careful optimization strategies, such as efficient transistor sizing and minimizing parasitic effects, these drawbacks can be mitigated to a great extent.

Ultimately, this methodology aligns well with industry practices, where scalable and reusable designs play a crucial role in modern VLSI (Very Large Scale Integration) systems. Through thorough simulation and analysis in Cadence Virtuoso, engineers can ensure functional correctness and optimize performance, paving the way for more efficient and sophisticated digital circuits.

7. FREQUENTLY ASKED QUESTIONS (FAQs)

Q1. Why use a 2:1 MUX instead of designing a direct 4:1 MUX?

Answer: Using 2:1 MUX simplifies the design process, enhances modularity, and provides a scalable approach that can be extended to larger multiplexers.

Q2. How does Cadence Virtuoso help in designing the MUX?

Answer: Cadence Virtuoso provides schematic capture, layout design, and simulation tools to design and verify the 4:1 multiplexer efficiently.

Q3. What is the primary limitation of implementing a 4:1 MUX using 2:1 MUXes?

Answer: The primary limitation is the increased propagation delay due to the additional levels of logic required.

Q4. Can this design be optimized for better performance?

Answer: Yes, by using low-power logic gates, optimizing transistor sizing, and minimizing interconnect capacitances, performance can be improved.

Q5. How can I verify the functionality of the MUX in Cadence Virtuoso?

Answer: You can use transient analysis and functional verification by applying different input combinations and observing the output waveform.